

120W Solar Station

Features

- Fast, simple installation: Fully integrated all-in-one design, single-point mounting on pole or wall, tiltable solar panel
- Intelligent MPPT controller: Boosts charging efficiency by 30%, with tracking efficiency of ≥99%
- Integrated industrial-grade 4G router: Encrypted VPN, remote network administration
- Dependable power in any weather: 120W monocrystalline module paired with 960Wh $LiFePO_4$ battery, plus lightning protection

(303) 680-6630 | info@titansis.com
99 Inverness Dr. E. Ste#180 Englewood, CO 80112-5122, USA

SPECIFICATION

Photovoltaic panel	
Type	Monocrystalline silicon
Maximum PV Input Power	120 W
Operating Temperature	–20 °C to 60 °C
PV Dimensions	31.06*30.24*1.18 inch (789*768*30 mm)
PV Weight	14.56 lbs (6.6 kg)
Battery	
Battery Type	Lithium iron phosphate battery（$LiFePO_4$）
Rated Battery Voltage	12.8 V
Battery Capacity	75 Ah / 960 Wh
Rated Charging Current	Max 10 A
Operating Temperature	Charging: 0 °C to 60 °C; Discharging: -20 °C to 60 °C
Battery Dimensions	9.72*6.89*4.29 inch (247*175*109 mm)
Battery Weight	15.44 lbs (7 kg)
Controller	
Type	MPPT
Rated Charging & Discharge Current	10 A
MPPT Tracking Efficiency	≥99%
Operating Temperature	–30 °C to 60 °C
Industrial 4G Router	
Cellular Support	4G LTE (Cat6), 3G, 2G; Dual SIM for link backup
Ethernet	5× Fast Ethernet ports (10/100 Mbps), WAN/LAN configurable
WiFi	802.11 b/g/n, 2.4 GHz, AP/Client mode, up to 300 Mbps
VPN & Security	IPsec, L2TP, GRE, OpenVPN, WireGuard; SPI firewall, DoS protection, ACL
Reliability	VRRP hot standby, link detection & auto-

	recovery, hardware watchdog
SIM Card Type	2 × Nano SIM, Drawer-style card holder
Supported Carriers	AT&T, Verizon, T-Mobile
Power	9~36 VDC
Operating Temperature	–20 °C to 70 °C
Antenna	
4G Antenna (Standard: Two)	Frequency: 690–960 MHz / 1710–2690 MHz; VSWR: ≤ 6.43; Gain: ≤ 2.94 dBi; Impedance: 50 Ω
WiFi Antenna (Standard: Two)	Frequency: 2400–2500 MHz / 5150-5850 MHz; VSWR: ≤ 2.0; Gain: ≤ 2.0 dBi; Impedance: 50 Ω
Other	
Loudspeaker	105 dB sensitivity, 8 Ω impedance, 400–5 kHz frequency response
Load	
Power Output Port	3*(Ø5.5 mm coaxial power plugs)
Signal Output Port	2*RJ45
Output voltage range	11.1~14 VDC
Safety Protection	
Protection Type	Over-current / Over-voltage / Short circuit / Under-voltage / Over temperature
Protective Class	IP65
General	
Bracket Material	Galvanized sheet
Battery indicator	Yes
Battery switch	Yes
External charging	Yes (Require an AC/DC adapter, Output of 24 VDC / 5 A）
Consumption (Static)	1.8~2.8 W
Consumption (Max.)	4.3 W
Load Runtime	~2.5 days (Battery fully charged, no

	charging input, with 15 W load)
Weight(Total)	71 lbs (32.2 kg)
Column pole diameter range	3.9~11.8 inch (100~300 mm)

Dimension

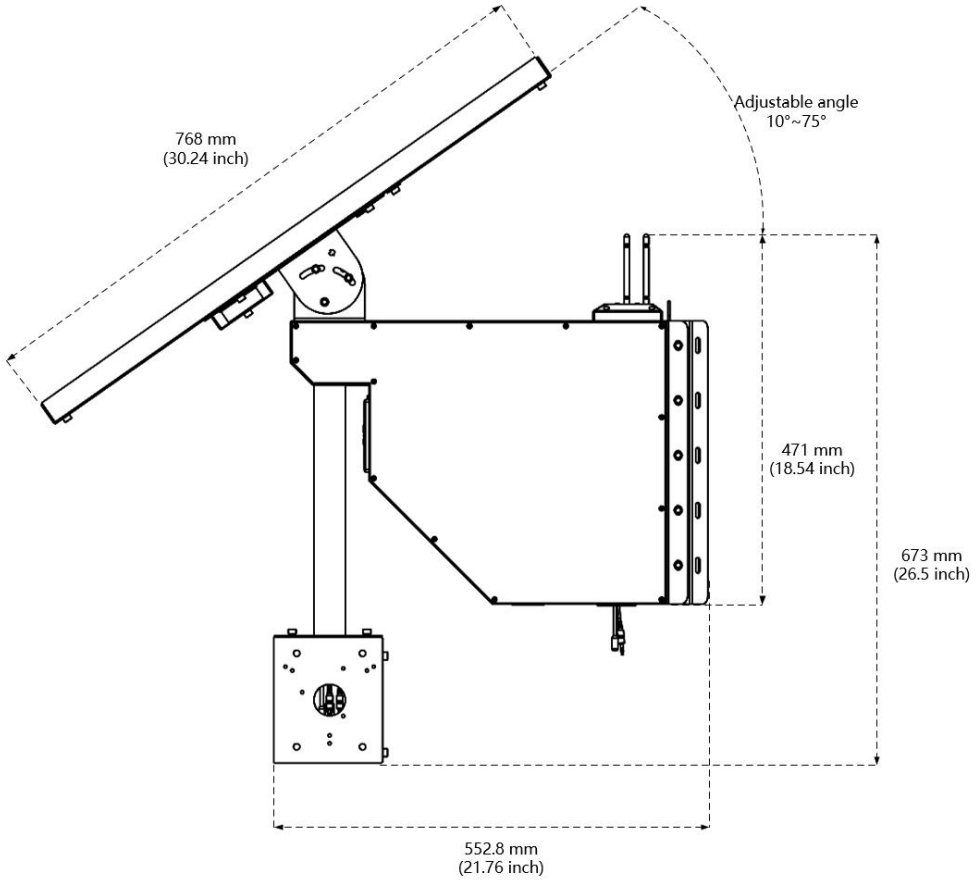

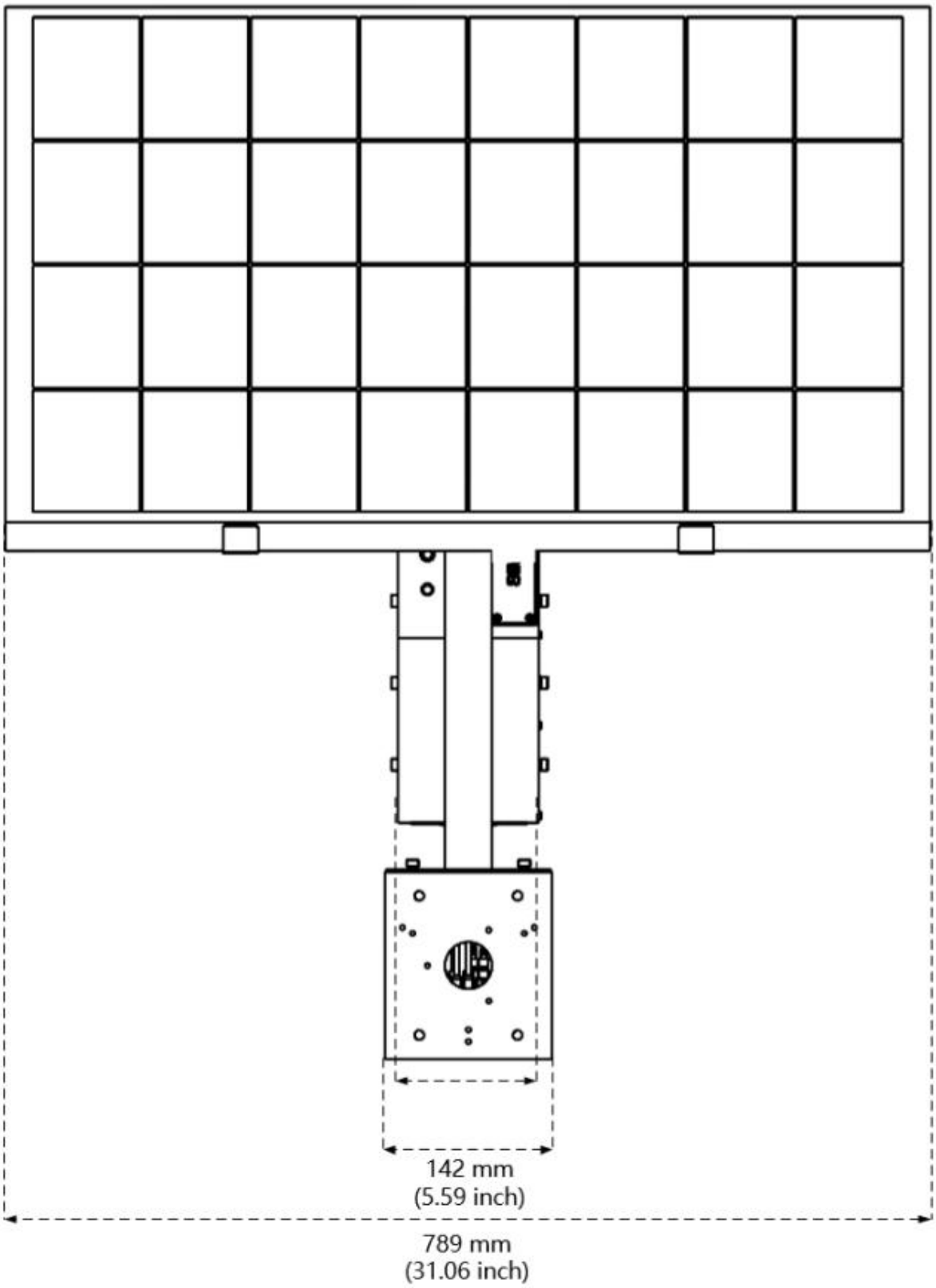

(303) 680-6630 | info@titansis.com
99 Inverness Dr. E. Ste#180 Englewood, CO 80112-5122, USA